TROUBLES IN GEARBOX

* When starting, engine runs in neutral gear and also with higher number of revs clutch does not engage:
- Throttle down and restart engine (oil is still cool and dense). When driving off, throttle up gradually to reduce jerks.
- Loosen or broken retain spring of 1st speed gear selflocking clutch.
- 1st speed gear selflocking clutch cage damaged.
* When starting, the engine joggle:
- Not enough oil in the gearbox- fill up to the required level.
- Clutch drum or 1st speed clutch shoe elements damage.
- 1st speed clutch retaining nut slackened (noise at engine idle run).
* Clutch skidding (especially in cool weather):
- Uncorrect oil in gearbox - replace oil with standard.
* Clutch not shifting from the 1st into 2nd or not engaging at all:
- Engine not powerful enough-see chapter 3 - Power loss
- Excessive oil in gearbox- check level.
- Brakes not disengaging - grease control cables.
- Clutch blocked - try to operate clutch at higher number of revs with motorized bicycle supported by stand.
- Countershaft and 1st speed gear selflocking clutch seized - check the slide bearing surface.
* When shifting to 2nd gear, clutch joggle.
- Chain sagged - tighten chain.
- Not enough oil in the gearbox - fill up to the required level.
* With engine disengaged, the motorized bicycle is difficult to move forward - rearward:
- Check the 1st speed gear selflocking clutch for damage.
* With engine in idle run in rearward motion blows:
- Check the starter shaft brake spring proper function.
* Transmission not disengaged by idle run:
- Clutch drum incorporated roller clutch blocked.
* When starting the engine does not turn over:
- Starter shaft holding clamp do not engage the inner chain transmission
- Clutch drum incorporated roller clutch damaged.

In case of transmission part damage or failure is necessary to disassemble, only the RH engine cover and proceed with disassembling and checking the parts as shown further.
Prior of operation drain the oil from the gearbox, dismantle the exhaust pipe (box wrench 10 mm, wrench 13 mm), the lateral protection shield fixed at swinging arm (wrench 10 mm), and slacken the cover screws. Attention at distance washers on starter shaft and countershaft.

1	SPARK PLUG CONDITIONS
2	ENGINE DOES NOT START
3	ENGINE RUNS OVER BUT STALLS, ENGINE RUNS IRREGULARY, STOPS OR IDLES ROUGHLY.
4	POWER LOSS
5	ENGINE MISFIRES

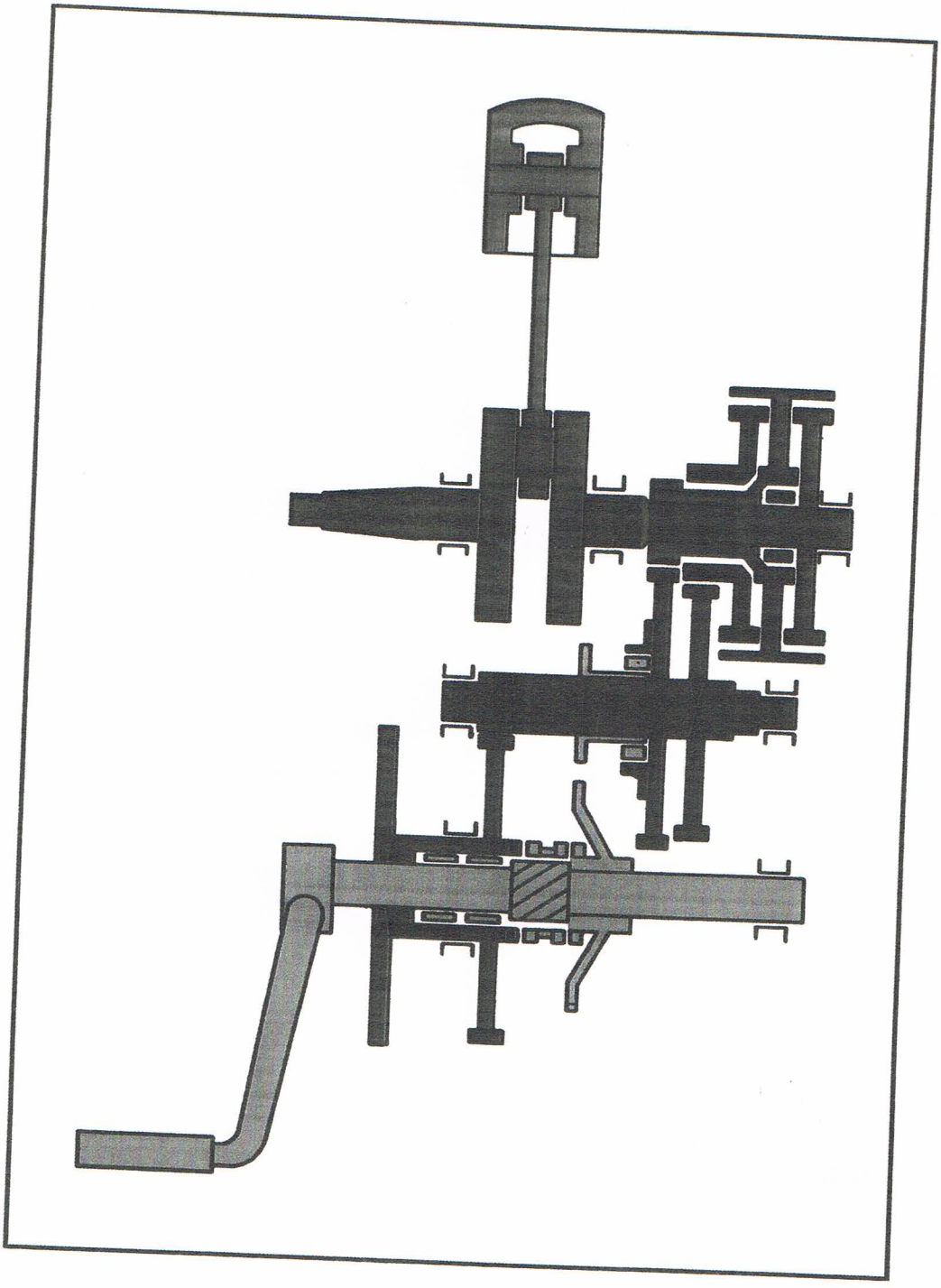

1st speed

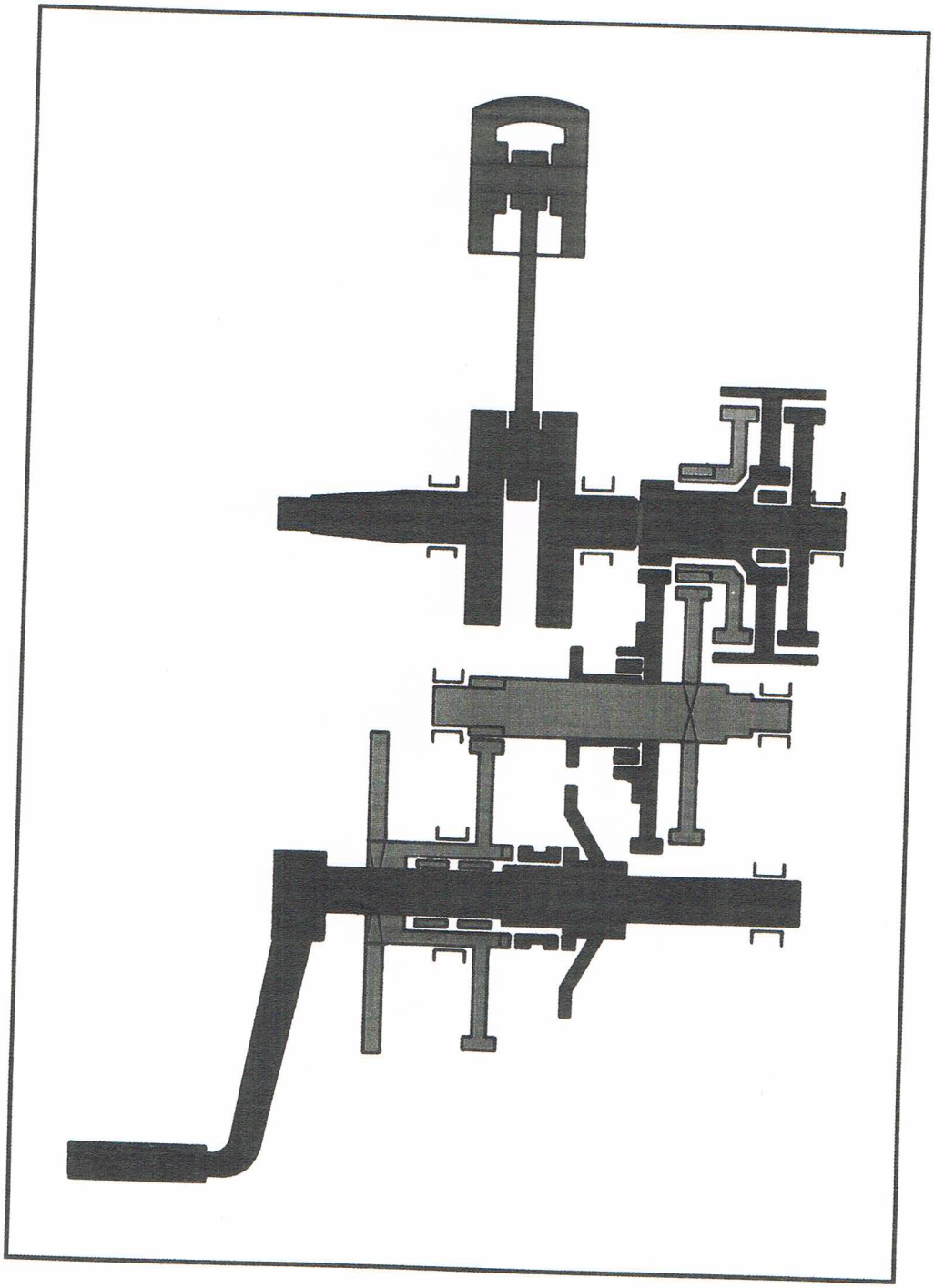

Starting

This manual is intended as a help in "trouble shooting" and consequent repair procedure, which occurs in exploatation due to normal wear, but in most cases due to improper maintenance of vehicle or engine.

For a dependable and prompt repair, follow the general rules as:
- Always use adequate tools.
- Where necessary, use a plastic mallet when dismantling individual assemblies,
- Clean individual parts prior to each check.
- Carefully clean all parts, oil movable parts, which are fitted by embossing them, and replace gaskets and sealing rings prior to re-assembly.
- Observe torque figures table when screwing on screws and nuts.

The manual shows only the execution of dis-assembly operations in which necessary special tools are needed. Dis-assembly of other parts (see explosion view in Spare parts catalogue) is meant like a common knowledge of an qualified mechanic to whom this manual is dedicated.

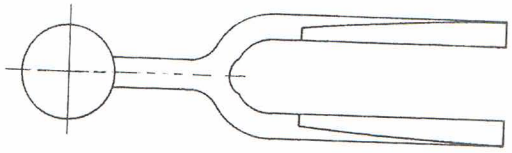	735.753 CRANKSHAFT MOUNTING FORK
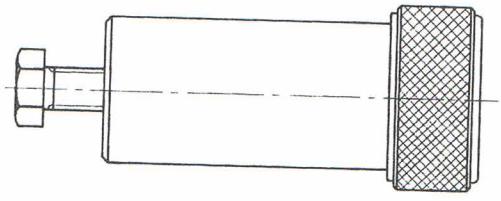	731.155 CRANKSHAFT BEARING PULLER
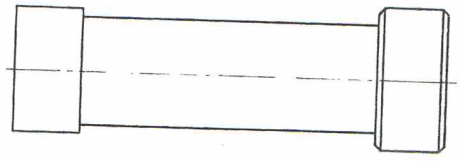	702.856 DIS - ASSEMBLY CRANKSHAFT BEARINGS
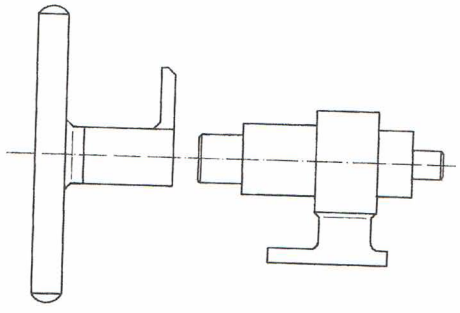	737.535 CLUTCH SPRING SETTING TOOL
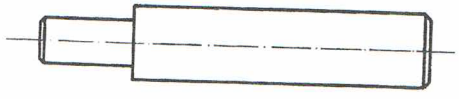	737.536 ROLLER CLUTCH INSTALLER

Ball bearings

Installation:	TOMOS Code. No.	Bearing No.	Dimensions d × D × b (mm)
Crankshaft	035.070 × 2	6203-C3	17 × 40 × 12
Crankshaft	035.202	608	8 × 22 × 7
Countershaft	035.072 035.031	6201	12 × 32 × 10
Mainshaft	035.037	6006	30 × 55 × 13
Wheel axle	044.225 × 2	6201-Z	12 × 32 × 10

Seal rings

Installation	TOMOS Code. No.	Dimensions d × D × b (mm)	pcs.
Crankshaft	036.554	17 × 35 × 7	2
Mainshaft	036.620	35 × 47 × 7	

TRANSMISSION

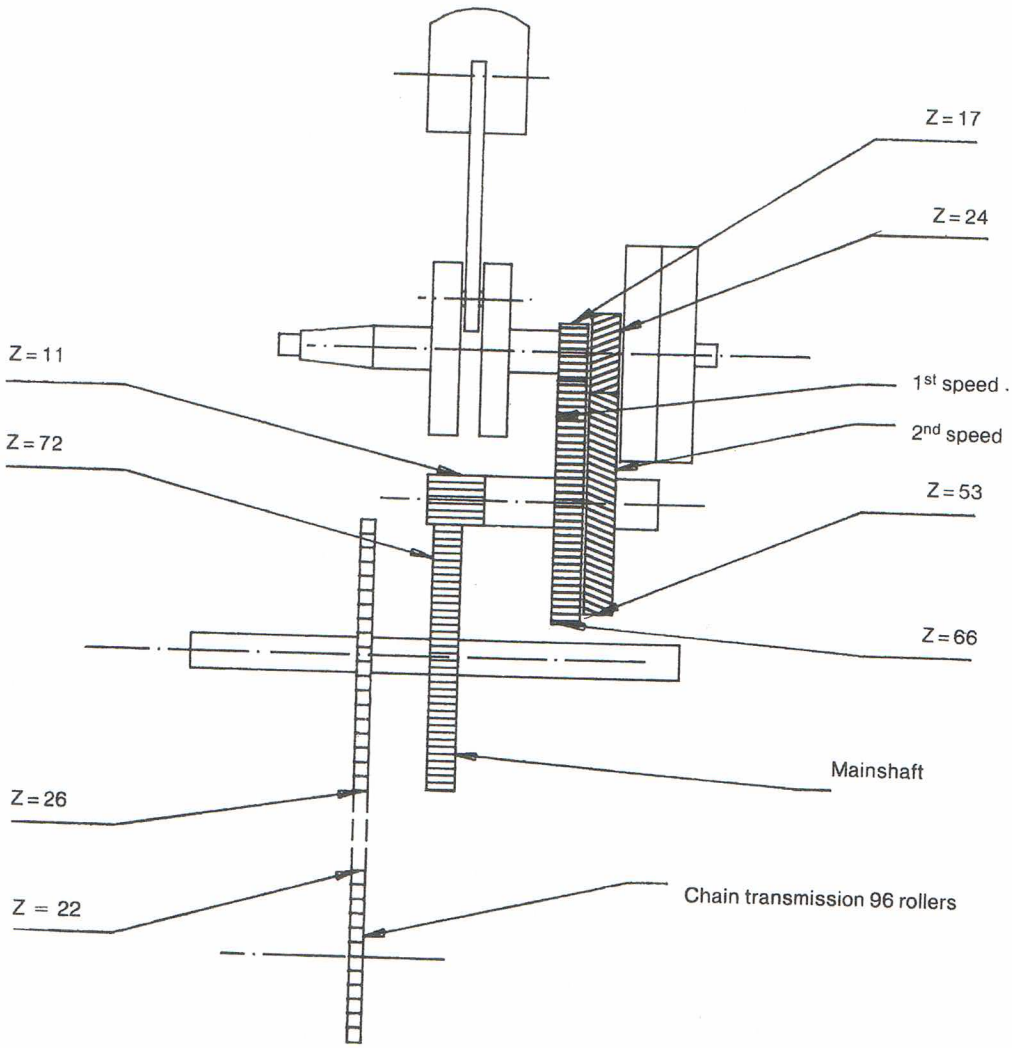

Gear ratio 1st speed	(66/17)	i = 3.8823
Gear ratio 2nd speed	(53/24)	i = 2.4615
Gearbox ratio 1st speed	(3.88 * 72/11)	i = 25.4117
Gearbox ratio 2nd speed	(2.46 * 72/11)	i = 16.1189
Chain transmission ratio	(22/26)	i = 0,846
Total transmission ratio 1st speed	(25,4117*0,846)	i = 21.502
Total transmission ratio 2nd speed	(16.11/0.846)	i = 13.631

CONTENTS

TECHNICAL DATA	3 - 5
STANDARD ELEMENTS	6
SPECIAL TOOLS	7 - 9
INTRODUCTION	10
FUNCTION OF ENGINE/A35	11 - 15
TROUBLE SHOOTING	16 - 21
TRANSMISSION REPAIRS	22 - 27
MAGNETO REPAIRS	28 - 29
CARBURETOR REPAIRS	30 - 31
WIRING HARNESS SPRINT, TOMOS A35	32 - 33
CYLINDER, PISTON, REED VALVE REPAIRS	34 - 37
CRANKSHAFT AND MAINSHAFT REPAIRS	38 - 41
FRAME AND SUSPENSION	42
WHEELS AND BRAKES	43
OIL PUMP	44